Our technology. Your success.
Pumps ▪ Valves ▪ Service

Amarex KRT –
Submersible Motor Pump

Applications:

- Waste water transport
- Municipal and industrial waste water
- Waste water treatment
- Sludge treatment
- Storm water transport

More information:
www.ksb.com/products

Type F/F-max

Type E/E-max

Type D

Type D-max

Type K/K-max

Type S-max

Intelligent monitoring

Amacontrol – Protection Module
for Water and Waste Water Products

Amarex KRT – Submersible Motor Pump

1 Reliable operation

- Non-clogging impellers with large free passages, optimised for every type of waste water
- Specially protected cable entry
- Monitoring: Sensors trigger a warning in the event of overheating or ingress of moisture

2 Energy savings

- Optimised hydraulic system yields high efficiency
- Energy-saving motors meeting IE3 requirements*

3 Dependability

Two bi-directional mechanical seals

4 Cost efficiency

- The right material for every fluid. Available in grey cast iron or, optionally, in corrosion-resistant duplex stainless steel or wear-resistant white cast iron for a long service life
- Rolling element bearings are lubricated for life to reduce maintenance
- Optimised spare parts inventories: Standardised components are interchangeable within this type series and with the waste water pumps of the Sewatec type series

Flexibility

Various installation types to suit different building structures

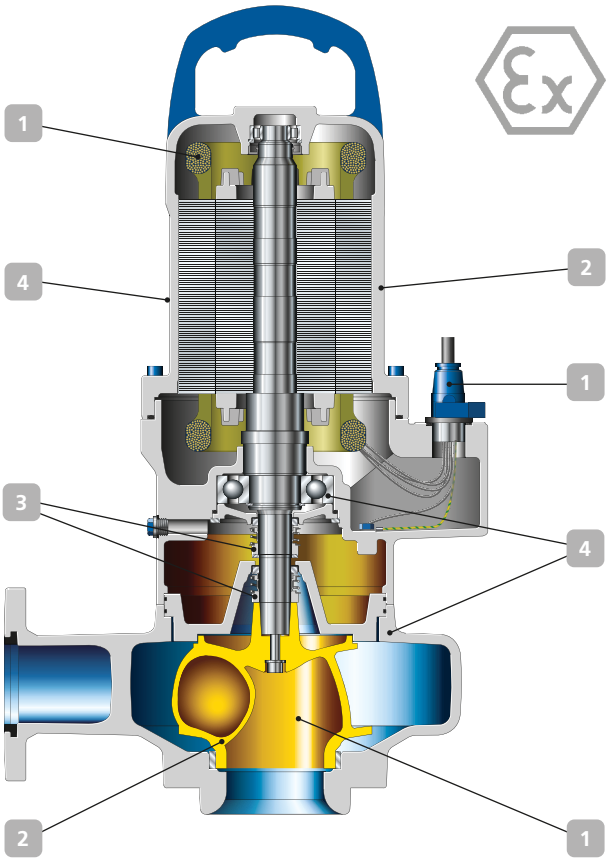

Technical data

Sizes	DN 40 to 700
Capacity	Up to 10,080 m³/h
Head	Up to 120 m
Fluid temperature	Up to 60 °C
Automation possible	Yes

* IEC 60034-30 standard not binding for submersible motors. Efficiencies calculated/determined according to the measurement method specified in IEC 60034-2. The marking is used for submersible motors that achieve efficiency levels similar to those of standardised motors to the IEC 60034-30 standard.

Installation options

Stationary wet installation

Transportable wet installation

Stationary dry installation, horizontal

Stationary dry installation, vertical

KSB SE & Co. KGaA
Johann-Klein-Straße 9
67227 Frankenthal (Germany)
www.ksb.com

2553.021/03-EN / 03.22 / © KSB SE & Co. KGaA 2022 · Subject to technical modification without prior notice

Performance curve

Customer item no.:
Communication dated: 16/05/2025
Doc. no.: Quick quote
Quantity: 2

Number: ES 8003583414
Item no.:100
Date: 06/08/2025

KRTK 700-902/31010UNG1-S

Version no.: 1

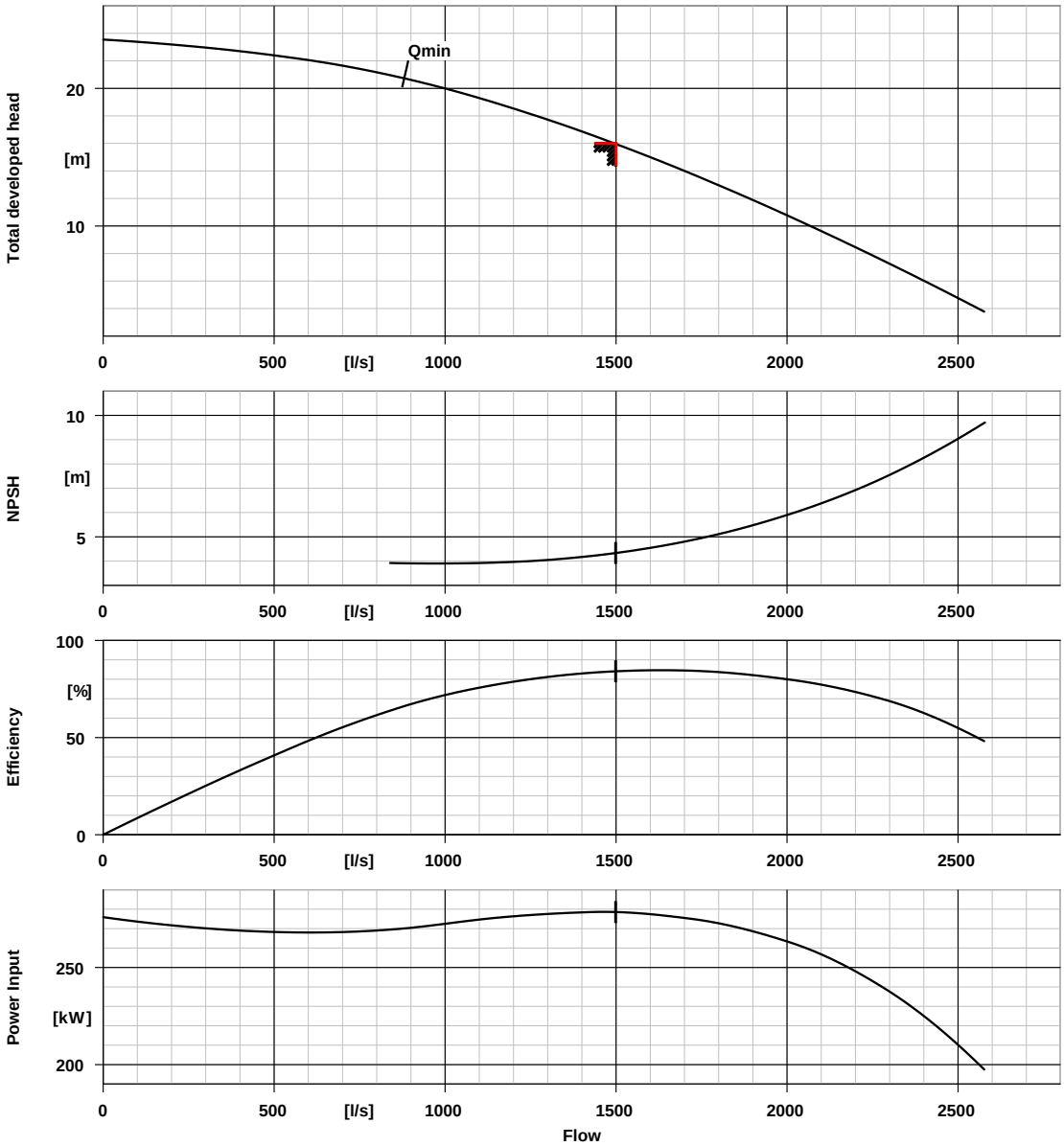

Curve data

Speed of rotation	595 rpm	Efficiency	84.2 %
Fluid density	998 kg/m³	Power absorbed	278.41 kW
Viscosity	1.00 mm²/s	NPSH 3%	4.33 m
Flow rate	1498.780 l/s	Curve number	K43572/0
Requested flow rate	1500.000 l/s	Effective impeller diameter	742.0 mm
Total developed head	15.97 m	Acceptance standard	ISO 9906 2B
Requested developed head	16.00 m		

Installation plan

Customer item no.:
Communication dated: 16/05/2025
Doc. no.: Quick quote
Quantity: 2

Number: ES 8003583414
Item no.:100
Date: 06/08/2025

KRTK 700-902/31010UNG1-S

Version no.: 1

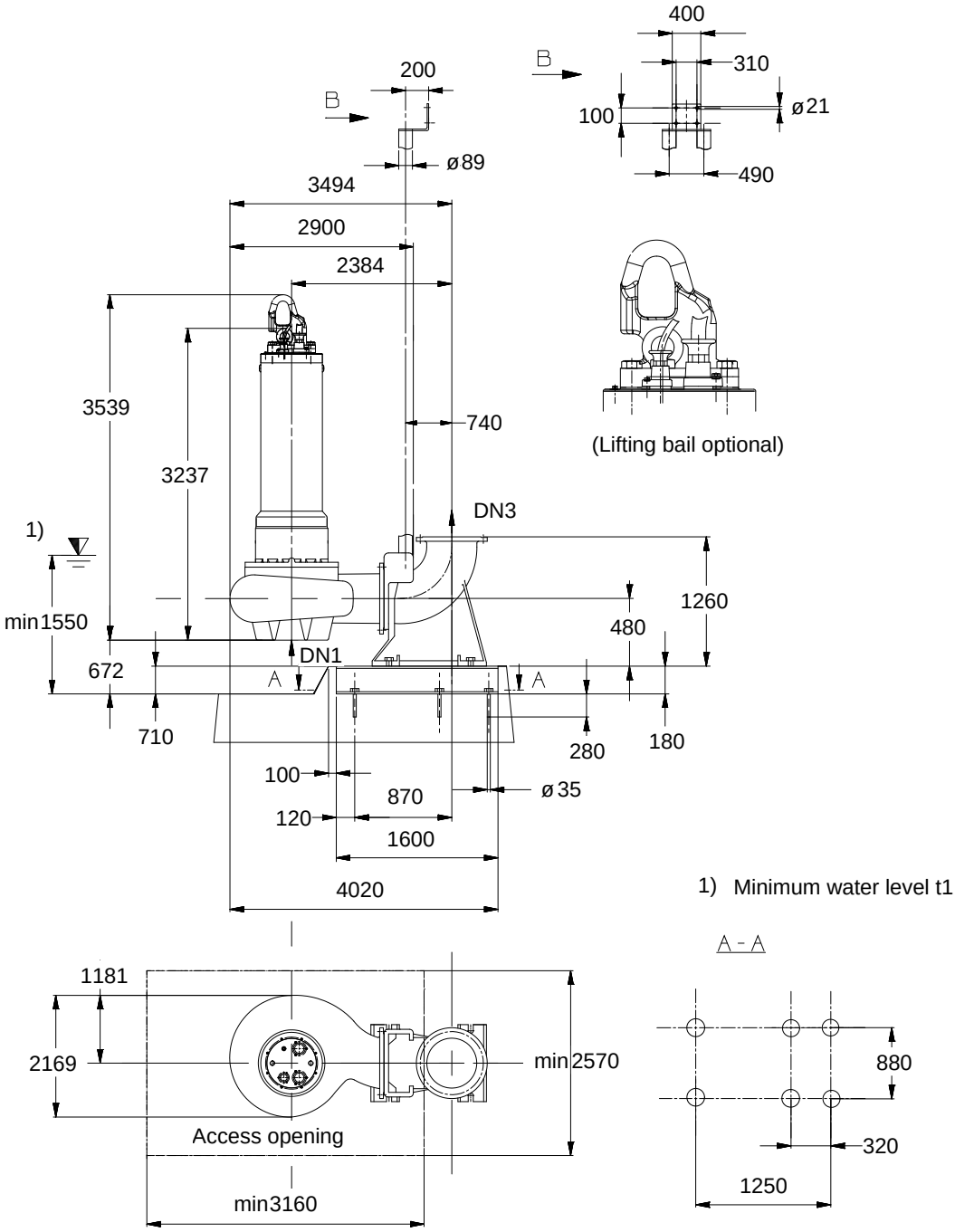

1) Minimum water level t1

Drawing is not to scale

Dimensions in mm

Installation plan

Customer item no.:
Communication dated: 16/05/2025
Doc. no.: Quick quote
Quantity: 2

Number: ES 8003583414
Item no.:100
Date: 06/08/2025

KRTK 700-902/31010UNG1-S

Version no.: 1

Motor

Motor manufacturer	KSB
Motor size	310N
Motor power	310.00 kW
Number of poles	10
Speed of rotation	595 rpm

Connections

Suction flange pump drilled according to(DN1)	unmachined
Duckfoot bend size (DN2 / DN3)	DN 700 Drilled according to EN

Weight net

Pump, Motor, Cable , Claw	7974 kg
Duckfoot bend	1665 kg
Total	9639 kg

Connect pipes without stress or strain!

For auxiliary connections see separate drawing.

Dimensional tolerances for shaft axis height: DIN 747	
Dimensions without tolerances, middle tolerances to:	ISO 2768-m
Connection dimensions for pumps:	EN735
Dimensions without tolerances - welded parts:	ISO 13920-B
Dimensions without tolerances - gray cast iron parts:	ISO 8062-CT11
Dimensions without tolerances - stainless steel parts:	ISO 8062-CT12

Performance curve

Customer item no.:
Communication dated: 16/05/2025
Doc. no.: Quick quote
Quantity: 1

Number: ES 8003583414
Item no.:200
Date: 06/08/2025

KRTK 400-500/4010UNG1-S

Version no.: 1

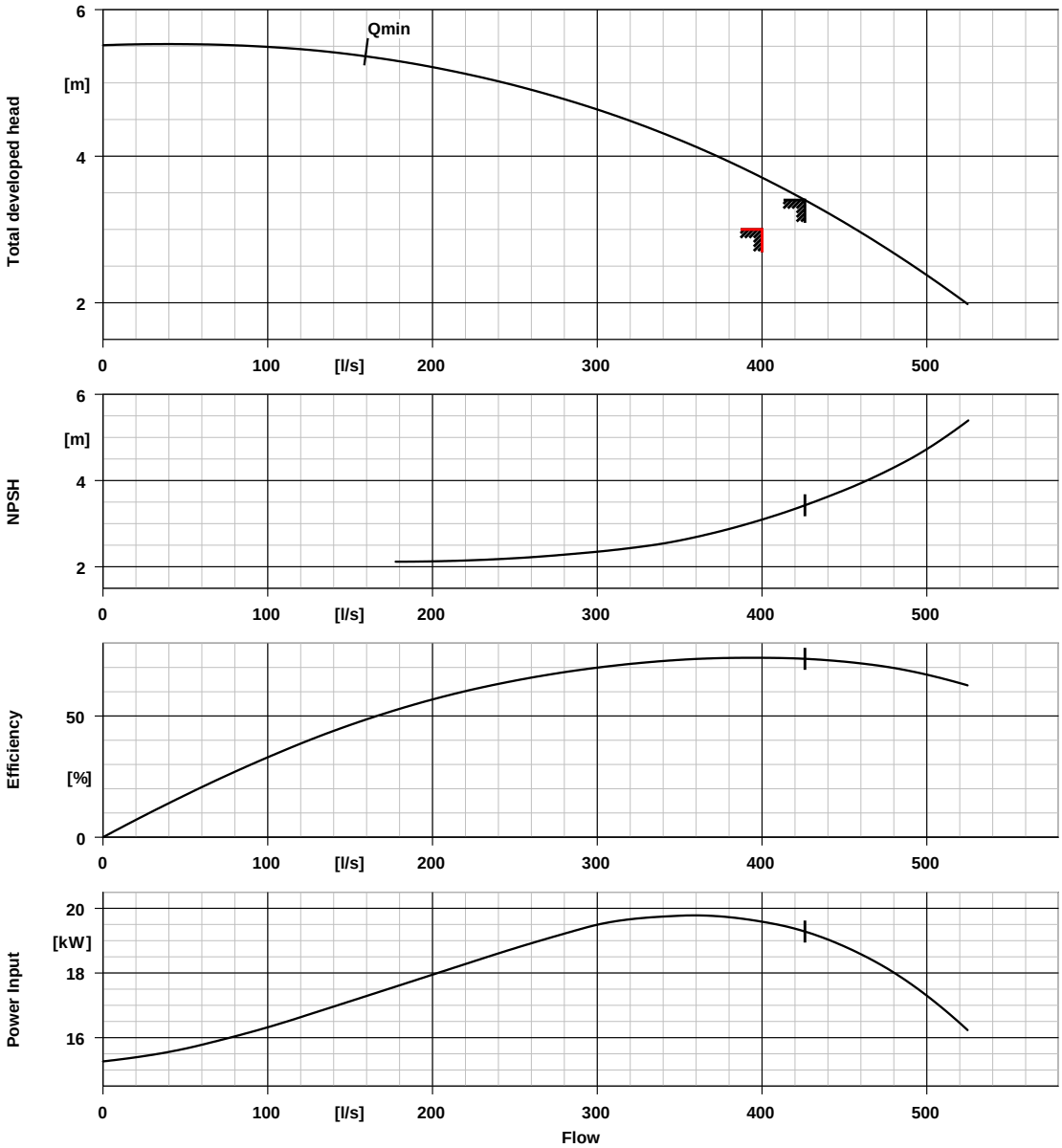

Curve data

Speed of rotation	596 rpm	Efficiency	73.6 %
Fluid density	998 kg/m³	Power absorbed	19.29 kW
Viscosity	1.00 mm²/s	NPSH 3%	3.42 m
Flow rate	426.045 l/s	Curve number	K43068/2
Requested flow rate	400.000 l/s	Effective impeller diameter	400.0 mm
Total developed head	3.40 m	Acceptance standard	ISO 9906 2B
Requested developed head	3.00 m		

Installation plan

Customer item no.:
Communication dated: 16/05/2025
Doc. no.: Quick quote
Quantity: 1

Number: ES 8003583414
Item no.:200
Date: 06/08/2025

KRTK 400-500/4010UNG1-S

Version no.: 1

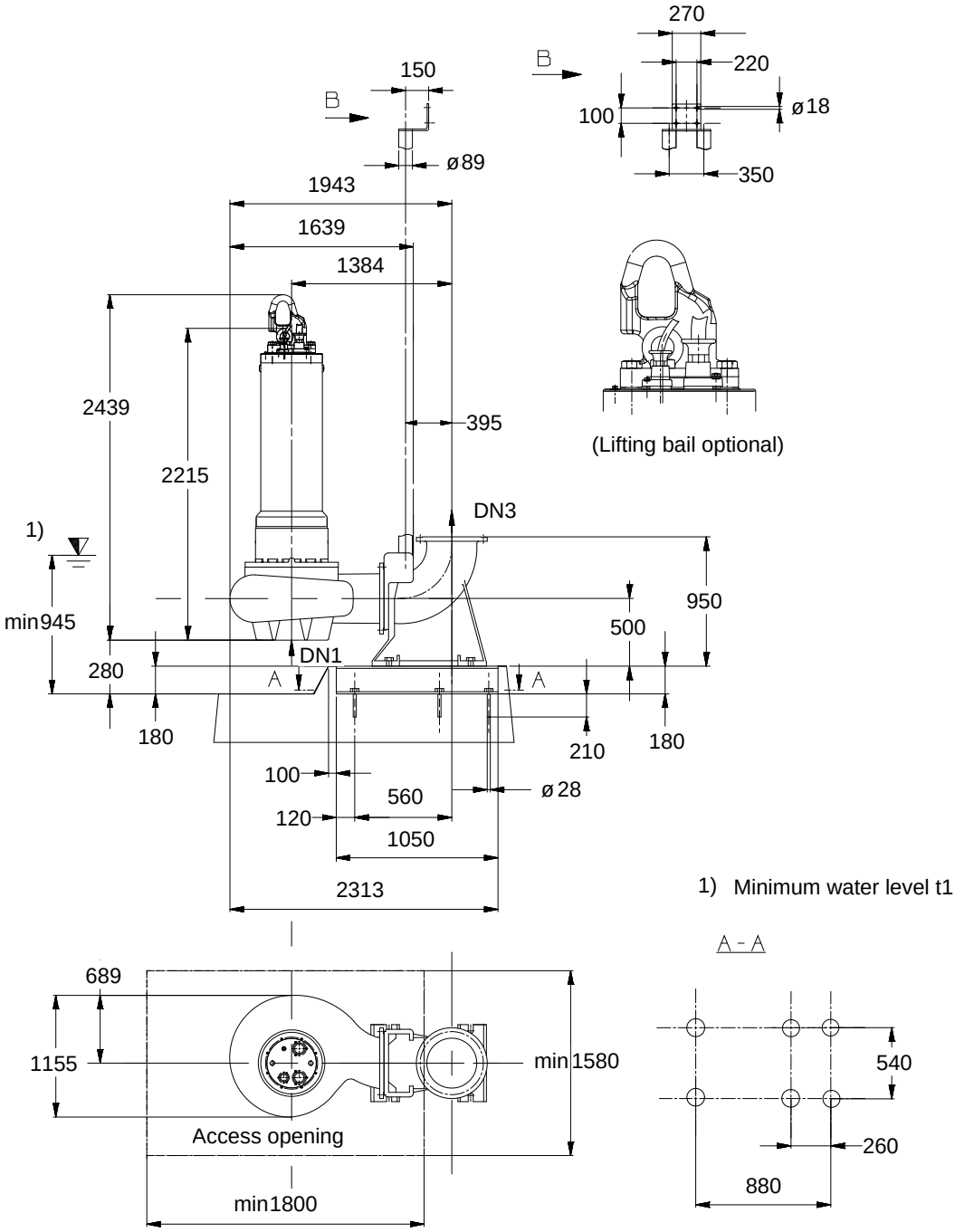

1) Minimum water level t1

Drawing is not to scale

Dimensions in mm

Installation plan

Customer item no.:
Communication dated: 16/05/2025
Doc. no.: Quick quote
Quantity: 1

Number: ES 8003583414
Item no.:200
Date: 06/08/2025

KRTK 400-500/4010UNG1-S

Version no.: 1

Motor

Motor manufacturer	KSB
Motor size	40N
Motor power	40.00 kW
Number of poles	10
Speed of rotation	592 rpm

Connections

Suction flange pump drilled according to(DN1)	unmachined
Duckfoot bend size (DN2 / DN3)	DN 400 Drilled according to EN

Weight net

Pump, Motor, Cable , Claw	2304 kg
Duckfoot bend	675 kg
Total	2979 kg

Connect pipes without stress or strain!

For auxiliary connections see separate drawing.

Dimensional tolerances for shaft axis height: DIN 747	
Dimensions without tolerances, middle tolerances to:	ISO 2768-m
Connection dimensions for pumps:	EN735
Dimensions without tolerances - welded parts:	ISO 13920-B
Dimensions without tolerances - gray cast iron parts:	ISO 8062-CT11
Dimensions without tolerances - stainless steel parts:	ISO 8062-CT12

Performance curve

Customer item no.:
Communication dated: 16/05/2025
Doc. no.: Quick quote
Quantity: 2

Number: ES 8003583414
Item no.:300
Date: 06/08/2025

KRTF 50-216/112UEG1-S

Version no.: 1

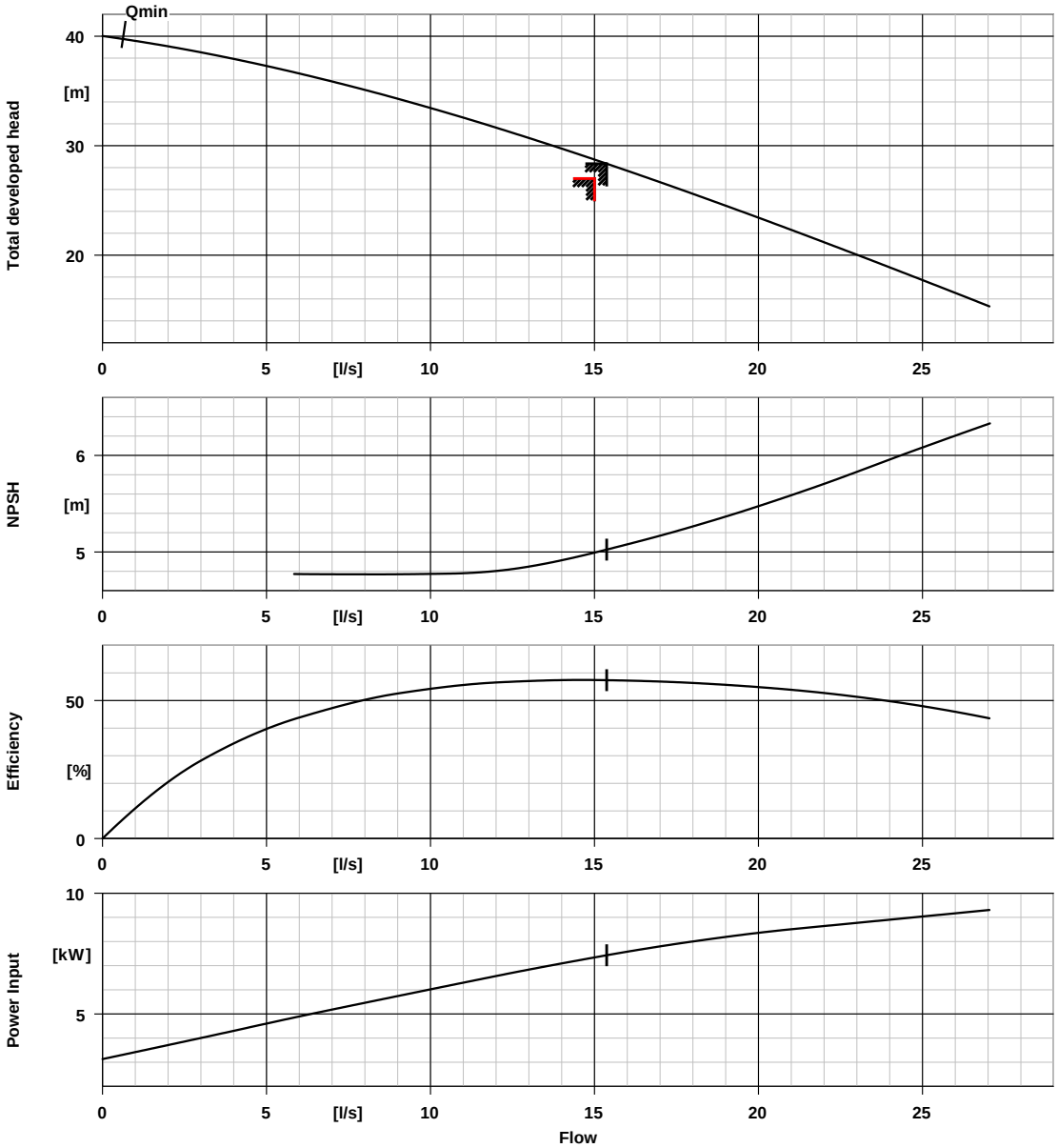

Curve data

Speed of rotation	2927 rpm	Efficiency	57.4 %
Fluid density	998 kg/m³	Power absorbed	7.43 kW
Viscosity	1.00 mm²/s	NPSH 3%	5.02 m
Flow rate	15.373 l/s	Curve number	K43322/4
Requested flow rate	15.000 l/s	Effective impeller diameter	160.0 mm
Total developed head	28.36 m	Acceptance standard	<10kW §4.4.2
Requested developed head	27.00 m		

Installation plan

Customer item no.:
Communication dated: 16/05/2025
Doc. no.: Quick quote
Quantity: 2

Number: ES 8003583414
Item no.:300
Date: 06/08/2025

KRTF 50-216/112UEG1-S

Version no.: 1

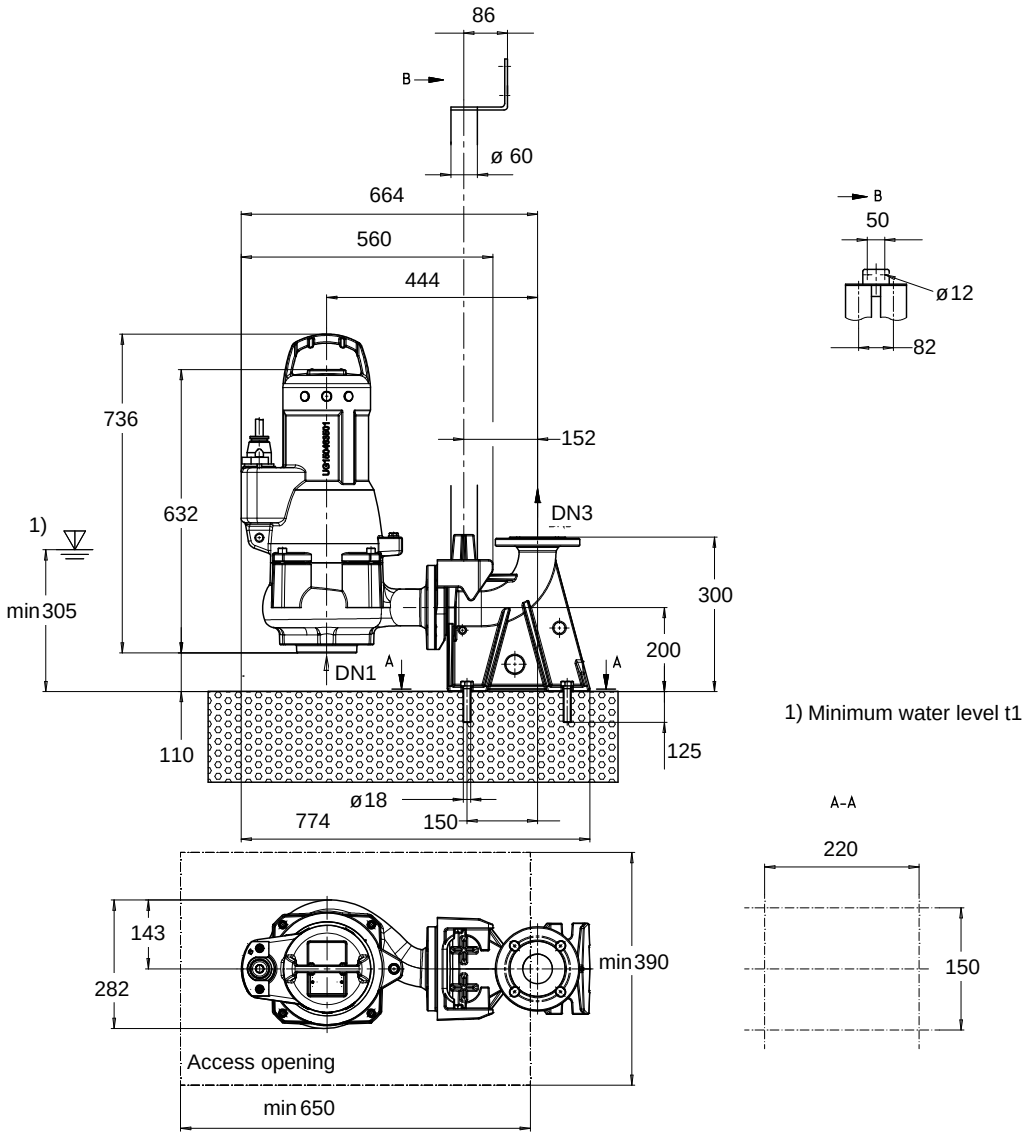

1) Minimum water level t1

Drawing is not to scale

Dimensions in mm

Installation plan

Customer item no.:
Communication dated: 16/05/2025
Doc. no.: Quick quote
Quantity: 2

Number: ES 8003583414
Item no.:300
Date: 06/08/2025

KRTF 50-216/112UEG1-S

Version no.: 1

Motor

Motor manufacturer	KSB
Motor size	11E
Motor power	11.00 kW
Number of poles	2
Speed of rotation	2892 rpm

Connections

Suction flange pump drilled according to(DN1)	unmachined
Duckfoot bend size (DN2 / DN3)	DN 50 Drilled according to EN

Weight net

Pump, Motor, Cable , Claw	148 kg
Duckfoot bend	20 kg
Total	168 kg

Connect pipes without stress or strain!

For auxiliary connections see separate drawing.

Dimensional tolerances for shaft axis height: DIN 747	
Dimensions without tolerances, middle tolerances to:	ISO 2768-m
Connection dimensions for pumps:	EN735
Dimensions without tolerances - welded parts:	ISO 13920-B
Dimensions without tolerances - gray cast iron parts:	ISO 8062-CT11
Dimensions without tolerances - stainless steel parts:	ISO 8062-CT12

Performance curve

Customer item no.:
Communication dated: 16/05/2025
Doc. no.: Quick quote
Quantity: 1

Number: ES 8003583414
Item no.:400
Date: 06/08/2025

KRTF 50-216/24UEG1-P

Version no.: 1

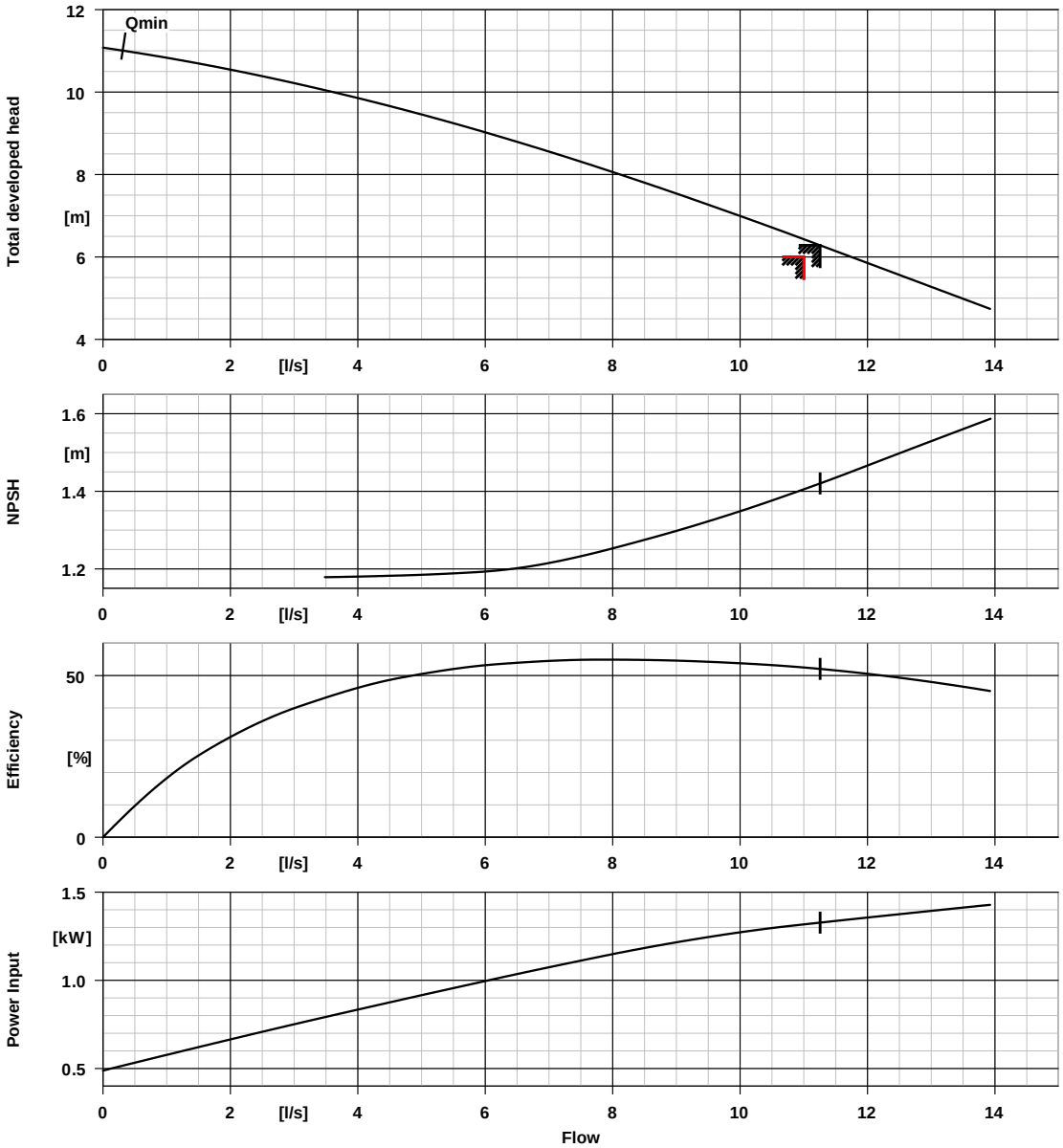

Curve data

Speed of rotation	1442 rpm	Efficiency	52.1 %
Fluid density	998 kg/m³	Power absorbed	1.33 kW
Viscosity	1.00 mm²/s	NPSH 3%	1.42 m
Flow rate	11.256 l/s	Curve number	K43323/4
Requested flow rate	11.000 l/s	Effective impeller diameter	170.0 mm
Total developed head	6.28 m	Acceptance standard	<10kW §4.4.2
Requested developed head	6.00 m		

Installation plan

Customer item no.:
Communication dated: 16/05/2025
Doc. no.: Quick quote
Quantity: 1

Number: ES 8003583414
Item no.:400
Date: 06/08/2025

KRTF 50-216/24UEG1-P

Version no.: 1

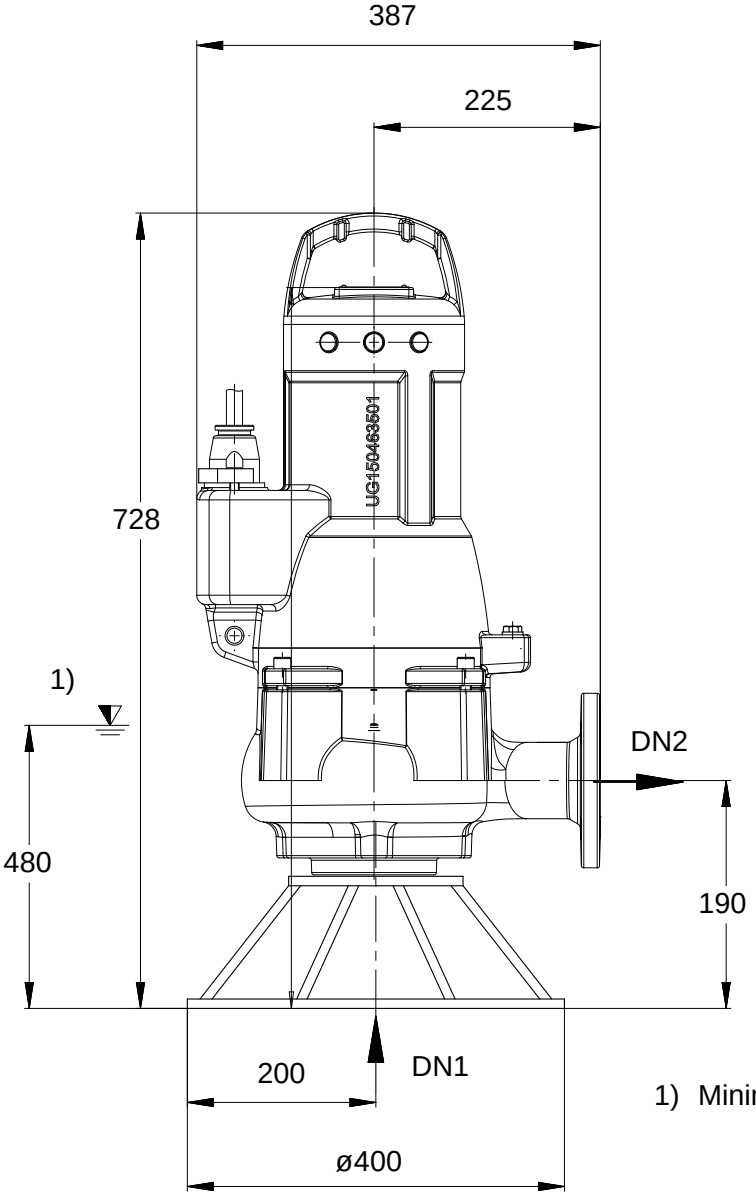

1) Minimum water level t1

Drawing is not to scale

Dimensions in mm

Installation plan

Customer item no.:
Communication dated: 16/05/2025
Doc. no.: Quick quote
Quantity: 1

Number: ES 8003583414
Item no.:400
Date: 06/08/2025

KRTF 50-216/24UEG1-P

Version no.: 1

Motor

Motor manufacturer	KSB
Motor size	2E
Motor power	1.80 kW
Number of poles	4
Speed of rotation	1422 rpm

Connections

Suction flange pump drilled according to(DN1)	unmachined
Discharge flange pump drilled according to(DN2)	DN 50 / PN 10 / Drilled according to EN 1092-2

Weight net

Pump, Motor, Cable	85 kg
Foot	5 kg
Total	90 kg

Connect pipes without stress or strain!

For auxiliary connections see separate drawing.

Dimensional tolerances for shaft axis height: DIN 747	
Dimensions without tolerances, middle tolerances to:	ISO 2768-m
Connection dimensions for pumps:	EN735
Dimensions without tolerances - welded parts:	ISO 13920-B
Dimensions without tolerances - gray cast iron parts:	ISO 8062-CT11
Dimensions without tolerances - stainless steel parts:	ISO 8062-CT12

Our technology. Your success.
Pumps ▪ Valves ▪ Service

Amarex – Submersible Motor Pump for Handling Waste Water

Applications:

In commercial, industrial and municipal sectors:

- Waste water transport
- Sludge transport
- Dewatering/water extraction

More information:
www.ksb.com/products

F-max impeller

D-max impeller

Amarex – Submersible Motor Pump for Handling Waste Water

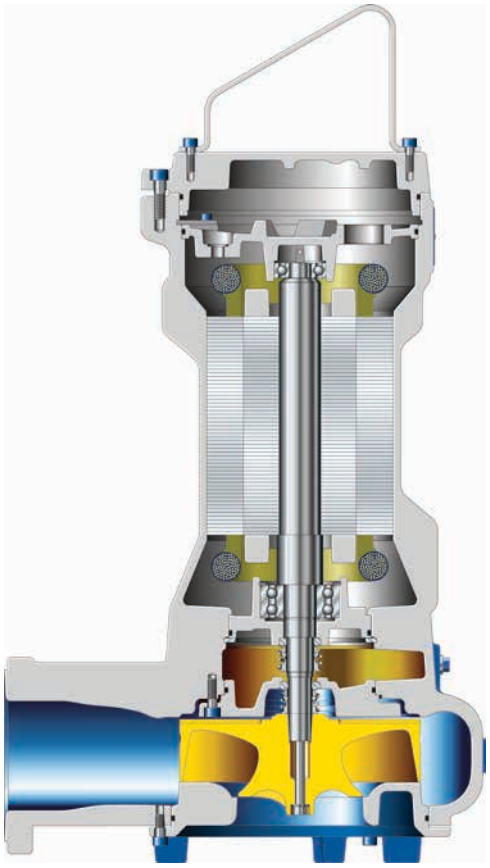

Efficient

- significant reduction of energy costs by optimised hydraulic system with F-max impeller
- new, open dual-vane D-max impeller with top hydraulic efficiency (“best in class”)
- high-efficiency motor of efficiency class IE3
- U-shaped ring on claw for perfect sealing between pump and duckfoot

Non-clogging

- free passage of up to 100 mm with F-max free-flow impeller
- no clogging by wet wipes with patented D-flector and D-max impeller

Cost-efficient

- increased impeller efficiency
- reduced maintenance work thanks to non-clogging impellers
- overall efficiency up to 69 %

Durable

- high operating reliability with optimally selected motor for continuous duty S1, thermal class H
- bearings with long service life (100,000 hours) for high operating reliability
- long service life with shaft made of corrosion-resistant stainless steel
- optimum material quality of D-max impeller to prevent abrasion (EN GJS-600-3)

Environmentally friendly

- eco-friendly, non-toxic oil fill for lubricating the mechanical seal (liquid reservoir)
- repairable; two spare part sets per impeller type for all pump sizes
- “Second life” through recyclable components

Flexible

- wide range of sizes to suit most applications (up to DN 150, up to 10 kW)
- ideally suited to handling abrasive and aggressive fluids due to wide variety of available material variants (e.g. cast chrome steel) and mechanical seals
- easy replacement of existing pumps thanks to a large choice of adapter claws and the replacement pumps app
- straightforward installation of stationary pump

Technical data

Pump sizes	DN 50 to DN 150
Flow rate	Up to 89 l/s / 320 m³/h
Head	Up to 42 m
Temperature - Standard (U) - Explosion-proof option (Y)	 Up to 40 °C Up to 40 °C

2573.025-EN / 11.19 / © KSB SE & Co. KGaA 2019 · Subject to technical modification without prior notice

KSB SE & Co. KGaA
Johann-Klein-Straße 9
67227 Frankenthal (Germany)
www.ksb.com

Performance Curve (Pump)

Customer Item No.:		Quotation:	340404
Inquiry Date:	06/08/2025	Item no.:	100
Inquiry No.:		Date:	06/08/2025
Quantity:	1	Page:	1 / 1

Amarex F 050-140 G1

Version No.: 0

ARX F050-140/014C2USG1-100 /00000S000

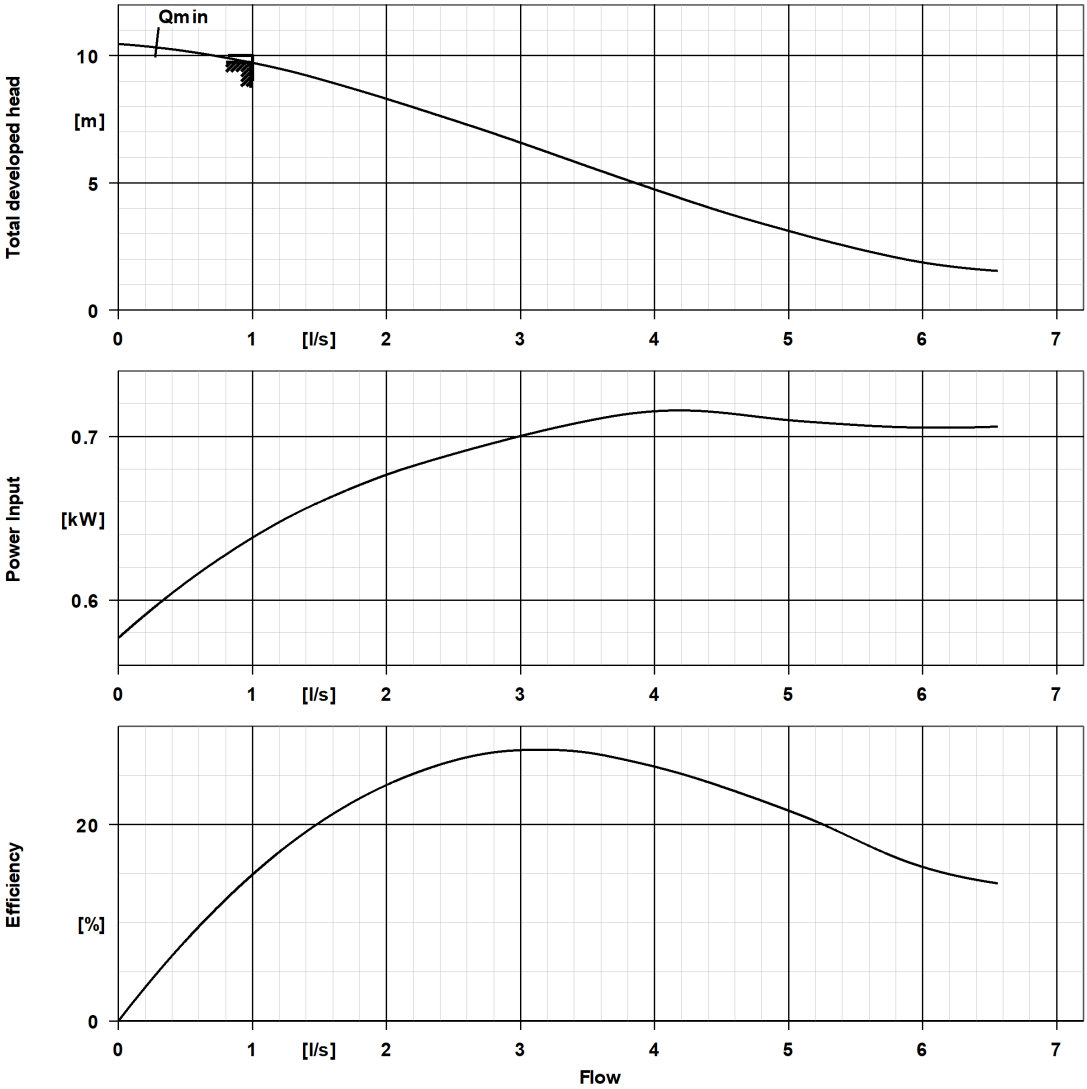

Curve Data

Rated speed Motor	2,856 1/min
Density Fluid handled	998 kg/m³
Kinematic viscosity Fluid handled	1 mm²/s
Flow rate	0.986 l/s
Target flow rate	1 l/s
Head	9.73 m
Target head	10 m
Efficiency Pump	14.8 %
Maximum power input at duty point	0.64 kW
NPSH required	0 m
Characteristic curve number	K2573-52-50140F/2
Impeller diameter D2	100 mm
Hydraulic calculation according to standard/class	EN ISO 9906 §4.4.2 (pump input power below 10 kW)

Installation plan

Customer Item No.:
Inquiry Date: 06/08/2025
Inquiry No.:
Quantity: 1

Quotation: 340404
Item no.: 100
Date: 06/08/2025
Page: 1 / 2

Amarex F 050-140 G1
ARX F050-140/014C2USG1-100 /00000S000

Version No.: 0

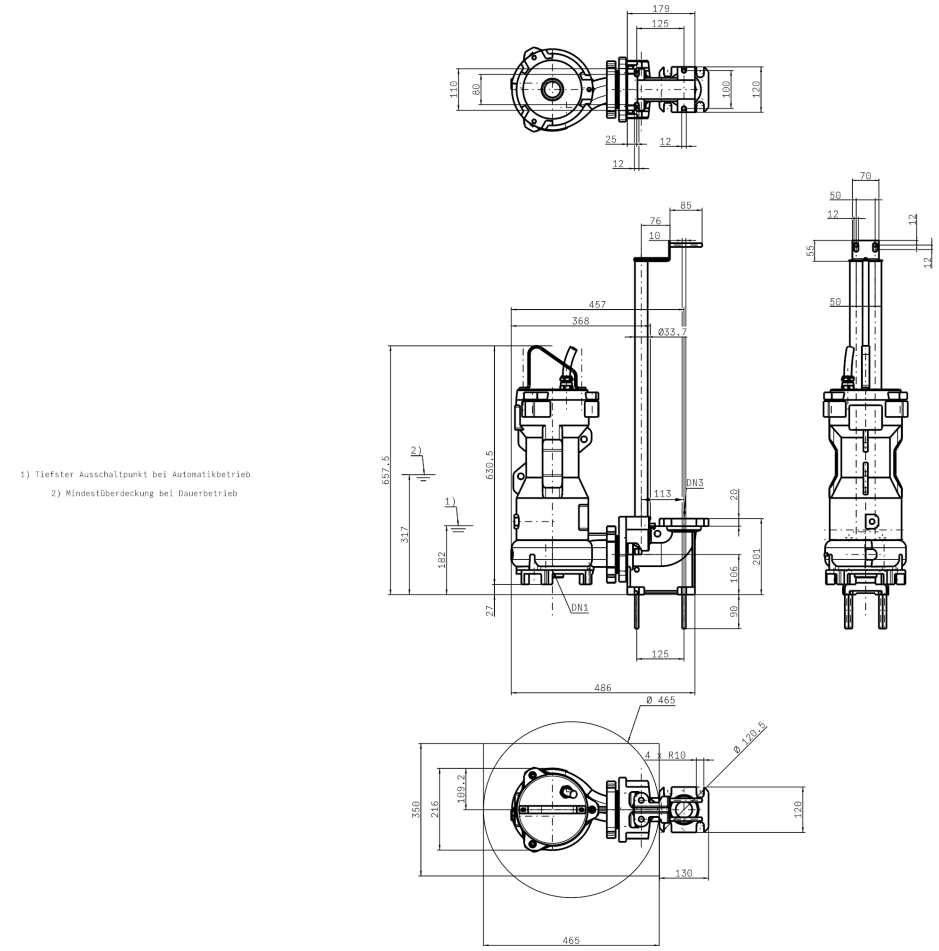

Drawing is not to scale.

Dimensions are given in mm

Motor

Motor manufacturer	KSB
Motor size	NG08M
Rated power Motor	1.4 kW
Number of motor poles	2
Rated speed Motor	2,856 1/min

Connections

Nominal diameter Suction nozzle	Without
Suction flange bolt hole pattern as per standard	Without
Nominal diameter Discharge nozzle	DN 50
Discharge flange bolt hole pattern as per standard	Drawing
Nominal size Outlet Elbow	DN 50
Nominal pressure Suction nozzle	PN 16
Nominal pressure Discharge nozzle	PN 16

Installation plan

Customer Item No.:
Inquiry Date: 06/08/2025
Inquiry No.:
Quantity: 1

Quotation: 340404
Item no.: 100
Date: 06/08/2025

Amarex F 050-140 G1
ARX F050-140/014C2USG1-100 /00000S000

Version No.: 0

Connect pipelines stress-free

Dimensional tolerances for shaft axis height: DIN 747
Dimensions without tolerances, middle tolerances to: ISO 2768-m
Connection dimensions for pumps: EN735
Dimensions without tolerances - welded parts: ISO 13920-B
Dimensions without tolerances - gray cast iron parts: ISO 8062-CT9

Net weight

Total weight Pump	57.82 kg
Weight Installation kit	15.74 kg
Total weight Pump set	73.56 kg